VIZIO

Quick Setup Guide

VIZIO 5.1 Soundbar

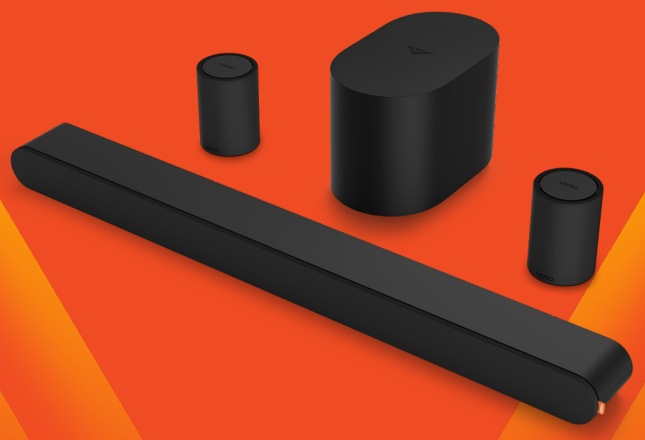

Lets get started.

Step-by-step instructions on the next page.

Get to know your soundbar

Audio Performance

For the highest quality HDMI supported audio performance, enable CEC settings on your TV. Refer to your TV manual to learn more.

Using Bluetooth® to stream music

1. Open the VIZIO mobile app and select your soundbar. Tap *Mobile Device (Bluetooth)* and follow instructions. The blue LED will blink rapidly and a tone will play twice to indicate the soundbar is in pairing mode.
2. Go to the Bluetooth settings on your mobile device, select *VIZIO 5.1 SOUNDBAR* and pair.
3. The blue LED will stop blinking and a confirmation tone will play when you have successfully paired.

Now you can stream your favorite music, podcasts and more. Don't have the VIZIO mobile app? Quick press the soundbar Bluetooth (✱) button and follow step 2.

VIZIO QuickFit

The simple mounting solution that attaches the soundbar directly to the bottom of select VIZIO TVs for a seamless fit.

Learn more at vizio.com/quickfit

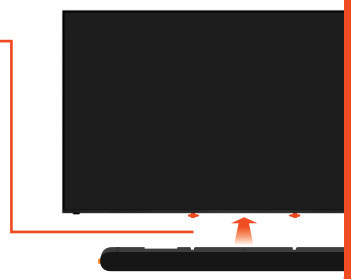

Home theater setup recommendations

Position the soundbar (A), wireless subwoofer (B), and wireless surround speakers (C) to your desired room layout. For the best audio experience, surround speakers should be placed in line with each other and the subwoofer placed in the corner of the room by the same wall as the TV.

Use the VIZIO mobile app to produce the optimal audio experience based on your setup:

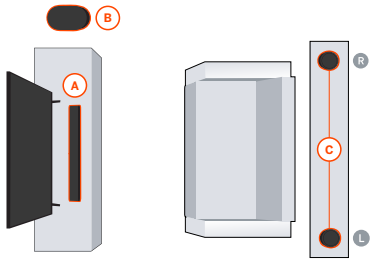

Customize subwoofer intensity, surround volume, *ClearDialog* and more to your specific audio preference.

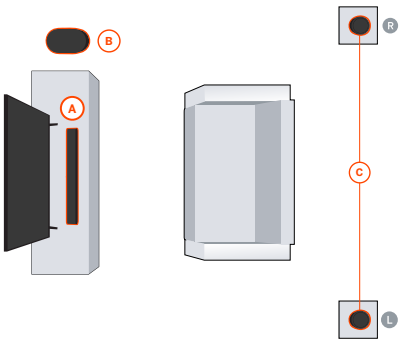

Adjust the surround volume and balance when placing surrounds further apart.

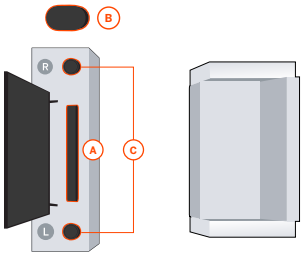

If placing surrounds in front of your seating area, select *Front Mode* under surround speaker settings

Important

Place the wireless surround speakers to your right and left as you face the television.
Look at the bottom of each surround speaker to identify which is Left (L) or Right (R).
Do not place the wireless surrounds on the floor, as optimal position is at or above ear level.

VIZIO

Quick Setup Guide

1 Plug in and connect the soundbar

Plug the soundbar in using the included power cable. A welcome tone will play when powered on and the front white LED light will turn on.

Then, connect the soundbar to the HDMI ARC or eARC port on your TV with the included HDMI cable.

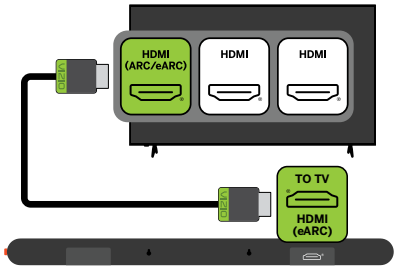

No TV HDMI port? No problem.
Contact VIZIO Customer Support at support.vizio.com if your TV requires optical connection.

2 Plug in the subwoofer and surrounds

Plug in the subwoofer and surrounds using the included power cables. The lights on the back of the subwoofer and surrounds are solid white when powered on and connected.

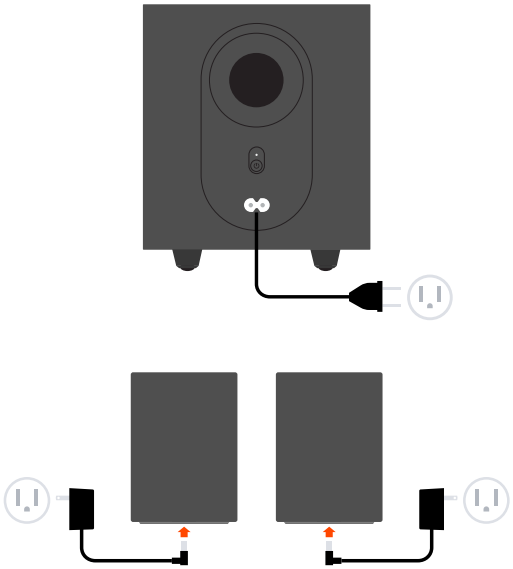

3 Download the VIZIO mobile app to control your soundbar

The VIZIO mobile app and a Walmart account are required for control of soundbar functionality, settings, and to receive system updates. Click the icons below.

VIZIO

Download on the App Store

GET IT ON Google Play

1. Stand near the soundbar and activate Bluetooth® on your mobile device.
2. Open the VIZIO mobile app to pair and connect to the soundbar. The app will discover your soundbar for the first 72 hours after installation. Select *VIZIO 5.1 SOUNDBAR* from the list of available devices to pair.
3. If pairing after the first 72 hours, ensure the soundbar is powered on with a quick press of the Volume (+) button on the soundbar. Quick press the soundbar Bluetooth button to initiate the pairing process for up to 1 hour.
4. Open the VIZIO mobile app to pair and connect to the soundbar.

No mobile device?
Your TV remote will also control soundbar volume and mute.

4 Optimize your audio in the VIZIO mobile app

Personalize audio settings and access advanced controls like Surround Sound Volume, Balance, Height, and more.

Reference the User Manual for a complete list and explanation of all audio controls in the VIZIO mobile app.

Need help with your 5.1 Soundbar (SV510XW-0908)?
Click here for additional support and documentation.